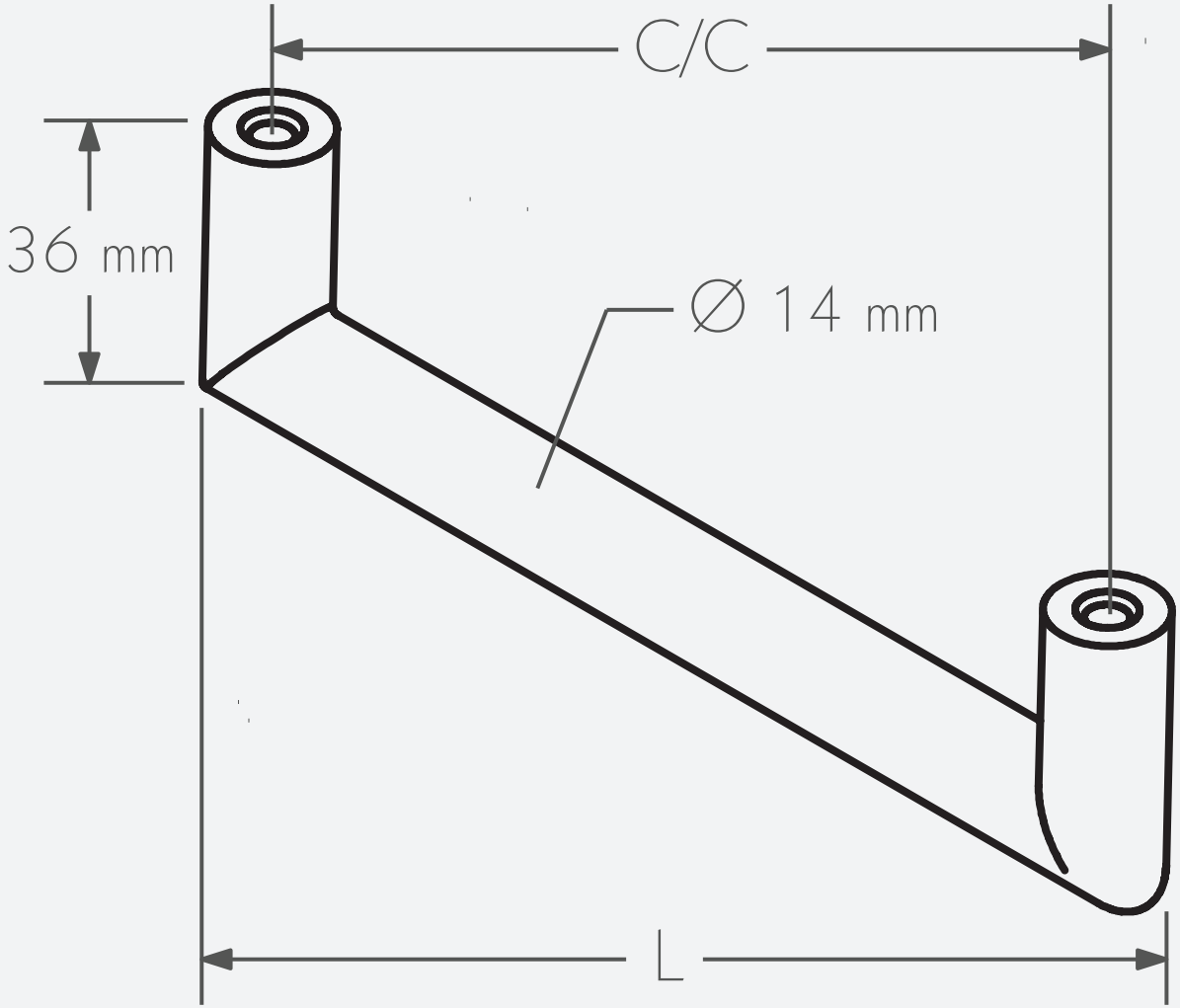

C/C:320mm; L:334mm
C/C:480mm; L:494mm
C/C:736mm; L:750mm