Floor-mount Type T/P coaxial tub filler with hand shower trim

TSA37

cUPC®

Specifications

Descriptions

- Thermostatic/pressure balance coaxial cartridge with check valves
- ½" inlet male NPT
- 1 integrated volume control
- 1-jet hand shower/scale-free
- 2 check valves
- Trim only

Available colors

- C : Chrome
- PN : Polished Nickel (PVD)

Certifications

- CSA B125.1
- ASME A112.18.1
- ASSE 1016
- CMR248 Approval

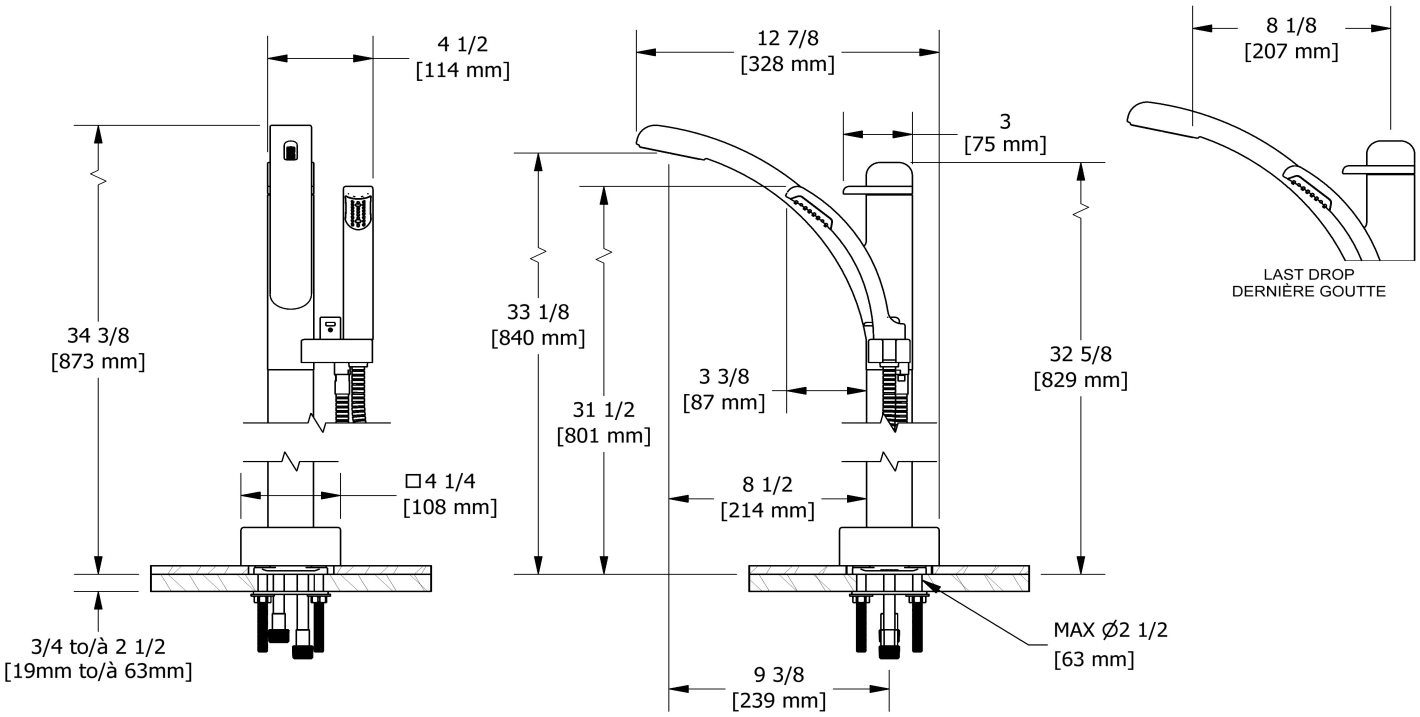

Sizes, models and finishes may differ from thoses presented.

Warranty

This **Riobel Inc.** product you have purchased carries a Limited Lifetime Warranty on the chrome, PVD finish, blacks and all working parts and is guaranteed from the initial purchase date against all manufacturing defects. All other finishes, including plastic components, are guaranteed for one year. All electric and/or electronic parts are covered by a 5-year limited warranty.

Customer Service

Ontario, West Canada : 888-287-5354 Quebec, Maritimes, United States : 866-473-8442

2020.06.12