SMITH® JAY R. SMITH MFG. CO.®
MEMBER OF MORRIS GROUP INTERNATIONAL
POST OFFICE BOX 3237
MONTGOMERY, ALABAMA 36109-0237 (USA)
TEL: 334-277-8520 FAX: 888-377-7818 www.jrsmith.com

CUSTOMER DRIVEN SINCE 1926

MEMBER OF:

LOCATION

SANI-CEPTOR® ACID RESISTANT COATED FLOOR & INDIRECT WASTE DRAINS

SQUARE NICKEL BRONZE TOP

12 1/2" (320) TOP - MEDIUM, DEEP & EXTRA DEEP RECEPTORS

FUNCTION: Used in kitchens, hospitals, food markets, restaurants, schools and all types of food handling areas where the ultimate in sanitation is desirable and a medium capacity receptor is required.

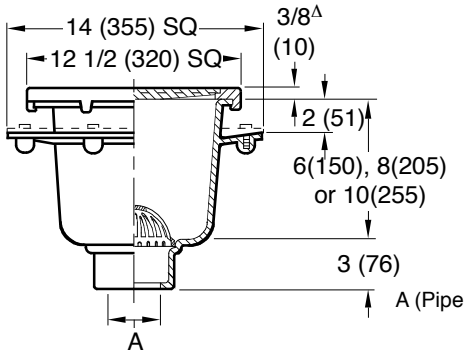

Free Area
42 SQ IN
(271) SQ CM

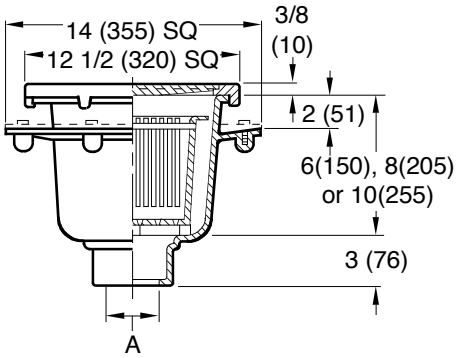

WITH DOME BOTTOM STRAINER

	6"(150) deep	8"(205) deep	10"(255) deep			6"(150) deep	8"(205) deep	10"(255) deep	
Fig. . .	3140C . . .	3150C . . .	3160C	CAULK OUTLET	Fig. . .	3141C . . .	3151C . . .	3161C
Fig. . .	3140Y . . .	3150Y . . .	3160Y . . .	NO-HUB OUTLET . . .	Fig. . .	3141Y . . .	3151Y . . .	3161Y

WITH SEDIMENT BUCKET

FEATURES, OPTIONS & ORDERING INFORMATION

REGULARLY FURNISHED: Cast Iron Flanged Receptor with Seepage Holes, Acid Resistant Coated Interior, Nickel Bronze Rim and Secured ADA Grate. Aluminum Dome Bottom Strainer or White ABS Sediment Bucket as Indicated by Figure Number.

OPTIONAL MATERIALS:

- All Duco Cast Iron Receptor -CI
- All Galvanized Receptor -G

VARIATIONS:

- Aluminum Flat Bottom Strainer -FBS
- Flashing Clamp -C
- Less Flange (Fig. 3155, 3156 with caulk outlet only)
- Polished Aluminum Dome Bottom Strainer -PDBS
- Vandal Proof Screws -U
- L Speedi-Set® Service Weight 02(50), 03(75) & 04"(100) sizes only
- LXH Speedi-Set® Extra Heavy 02(50), 03(75) & 04"(100) sizes only
- S.S. Mesh Lined Bucket -BS

SUFFIX NUMBER

SQUARE RIM	DESCRIPTION
-10	Less NB Rim and Grate
-11	Less Grate w/NB Rim
-12	With NB Rim and 1/2 Grate
-13	With NB Rim and 3/4 Grate
-14	With NB Rim and Grate with 2 1/2"(64) SQ Center Hole
-15	With NB Rim and Aluminum Recessed Grate
-19	With NB Rim and Hinged ADA Grate
-21	With NB Rim and Grate with 4"(100) DIA NB Funnel
-22	With NB Rim and Grate with 6"(150) DIA NB Funnel
-25	With NB Rim and Grate with 8 1/4(210) x 3 1/4(83) x 4 1/2"(115) High Oval NB Funnel
-26	With NB Rim and Grate with 6(150) x 2 1/2(64) x 1"(25) High Oval NB Funnel
-41	With NB Rim and Solid Cover
-42	With NB Rim and 1/2 Solid Cover
-43	With NB Rim and 3/4 Solid Cover
-44	With NB Rim and Solid Cover with 2 1/2"(64) DIA Center Hole
-49	With NB Rim and Stainless Steel Grate
-69	With NB Rim and XH Stainless Steel Secured ADA Grate [Δ3/8"(10) dimension becomes 1"(25)]

NOTE: Dimensions shown in parentheses are in millimeters.

REV.	DATE	DESCRIPTION	BY	CKD. BY
R	3-13-23	Added ® to Speedi-Set	KK	CL
Q	1-20-23	Added "ADA"	KK	CL
P	1-28-22	Revised Variations	KK	CL
N	3-22-19	Revised Variations	MW	CL

WEIGHT POUNDS | VOLUME CUBIC FEET

FIGURE NUMBER **3140-3161 Series**

WARNING: Cancer and Reproductive Harm - www.P65Warnings.ca.gov

FIGURE NUMBER	3140-3161 Series
DRAWN BY:	PJ
CHECKED BY:	JD
APPROVED BY:	SJM
DATE:	9-19-85
SCALE:	NONE
SIZE	A
DRAWING NUMBER	S3140
	R

WE CAN ASSUME NO RESPONSIBILITY FOR USE OF SUPERSEDED OR VOID DATA

DIMENSIONS ARE SUBJECT TO MANUFACTURERS TOLERANCE AND CHANGE WITHOUT NOTICE