CURRENT
fixtures + faucets + lighting

SPECIFICATION

Model Number: T009TM4

Single Handle Floor Mount Freestanding Tub Trim Set

- Rigid/Swivel Gooseneck Spout
- 7-13/16” Reach, 36-1/8” from Floor to Aerator
- Two Way Pressure Balanced Ceramic Disc Diverter Cartridge
- Single Function Handheld Showerhead
- Pivot Hand shower Holder
- 60” Stainless Steel Flex Hose
- For Use with B0044 & B0144 Series Valves - Valve not included
- Showerhead Limited to 1.75 GPM

Code and Standards
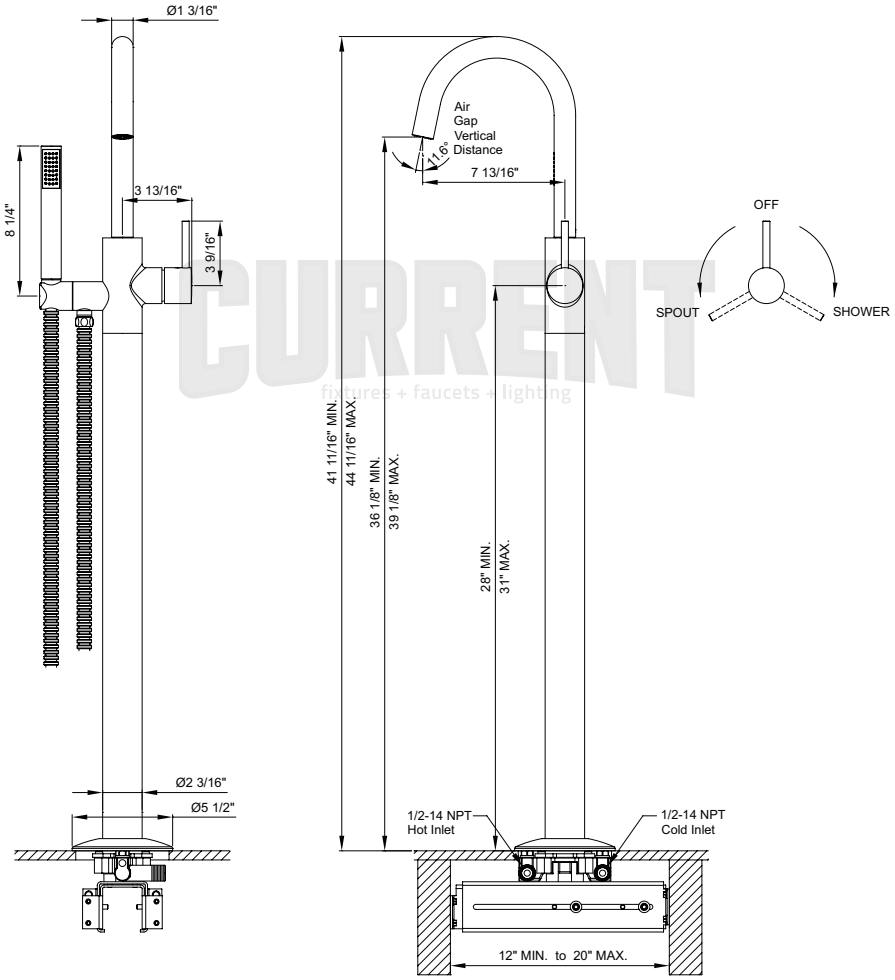
- ASME A112.18.1-2018/CSA B125.1-18
- Cal Green
- EPA Watersense
- ADA: Compliance to ICC/ANSI A117.1 (Lever Handle Only)