California Faucets®

Descanso® Works

Bridge Kitchen Faucet with Sidespray

K81-120S-BL
K81-120S-WH
K81-120S-BWH
K81-120S-RWH

Features

- *25+ artisanal finished including 12 PVD finishes*
- *All brass construction*
- *Spout rotates 360°*
- *3-hole deck mount installation*
- *Built-in diverter for sidespray*
- *Insulated brass sidespray handle and trigger*
- *Mixed water supplied to sidespray without separate valve*
- *Flexible braided hoses for ease of installation*
- *1/4 turn ceramic disc cartridge(s)*
- *1.8 gpm (6.8 L/min) max flow rate*

Codes/Standards Applicable

Product meets or exceeds the following:

- *ASME A112.18.1/CSA B125.1*
- *NSF 61, NSF 372, CEC & DOE*
- *Commonwealth of MA*
- *ADA compliant (with lever handles)*

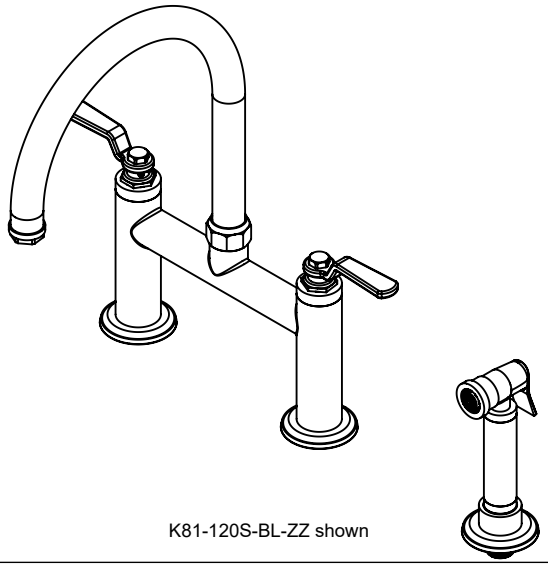

K81-120S-BL-ZZ shown

Through-Hole Specifications	Min	Recommended	Max
Faucet:	∅1-1/8" [29]	∅1-3/8" [35mm]	∅1-3/8" [35mm]
Sidespray:	∅1-1/8" [29]	∅1-3/8" [35mm]	∅1-3/8" [35mm]

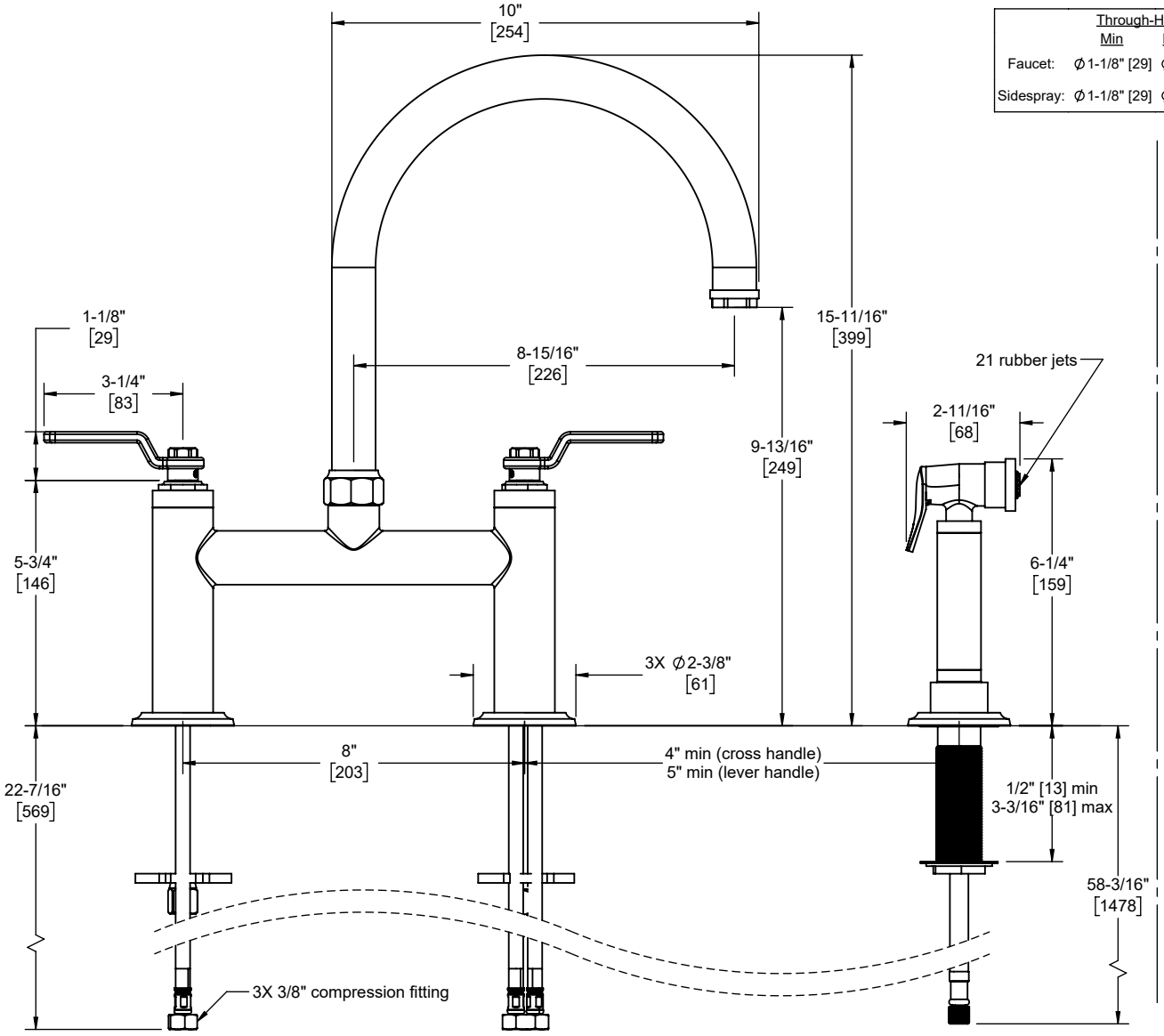

K81-120S-WH
K81-120S-BWH
K81-120S-RWH

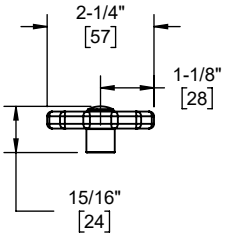

Specifications subject to change without notice

Dimensions are inches, rounded to 1/16"
[Dimensions in brackets are mm, rounded to 1mm]